G OVERALL ELECTRICAL WIRING DIAGRAM
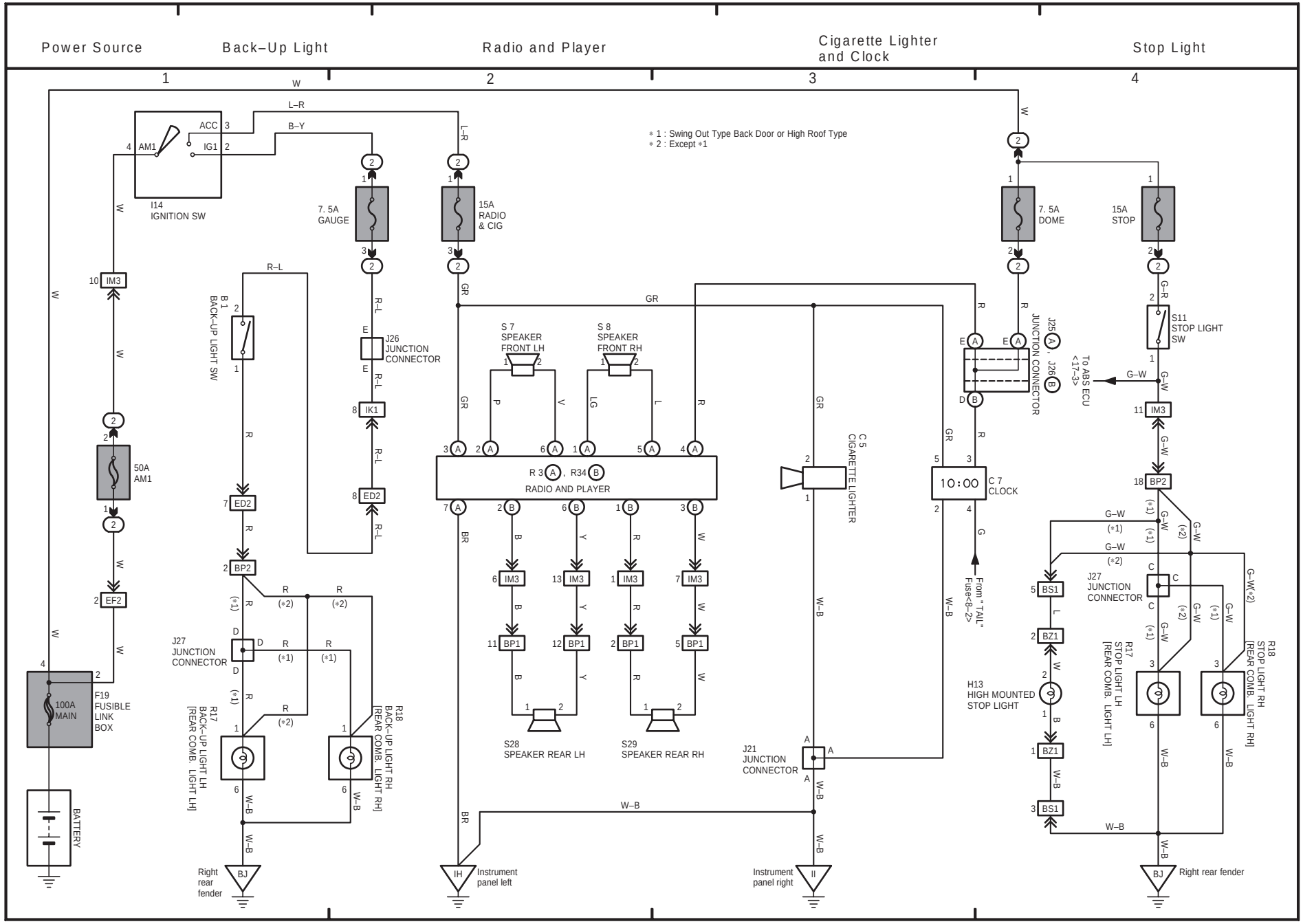
10 HIACE (LHD)